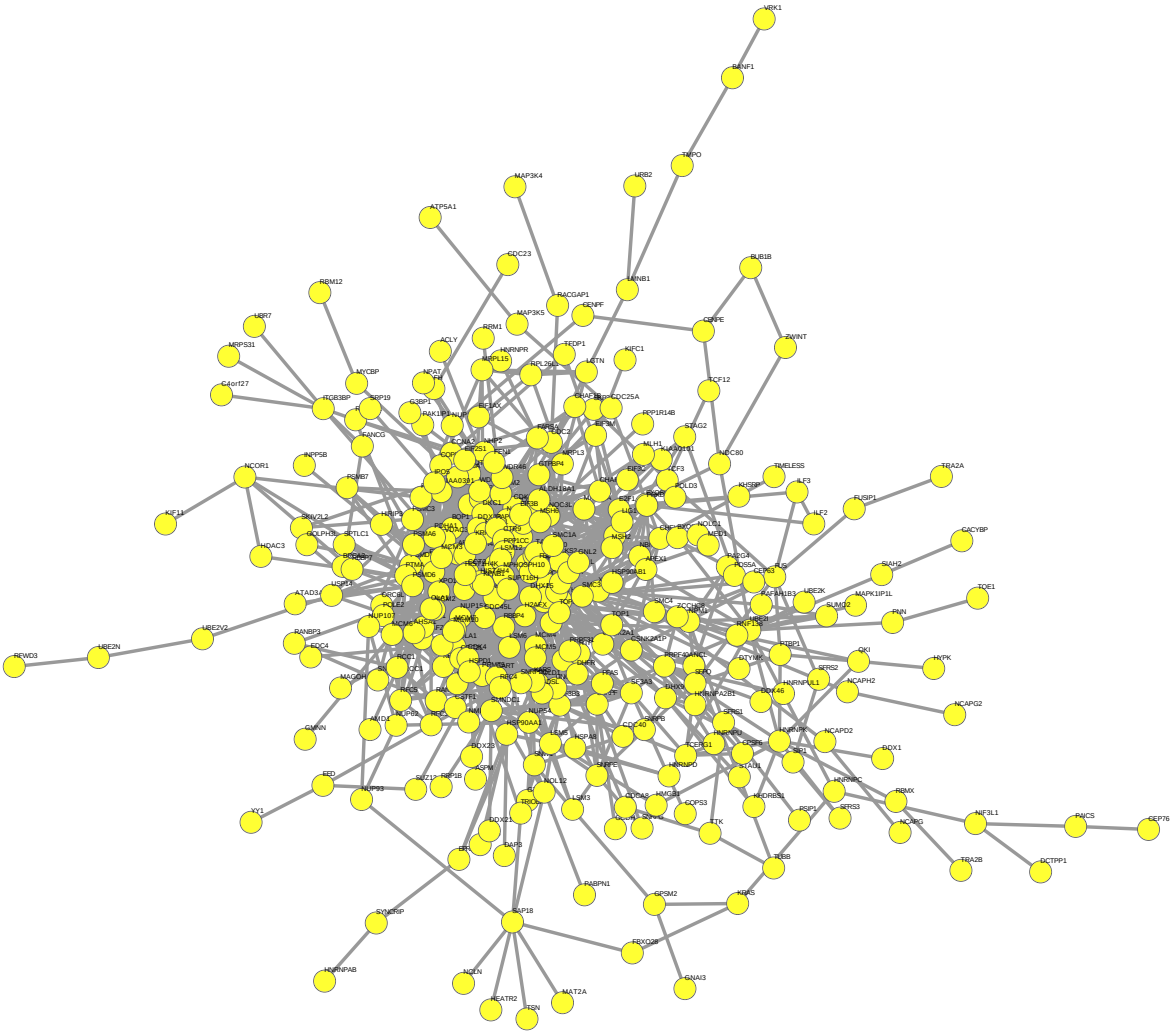

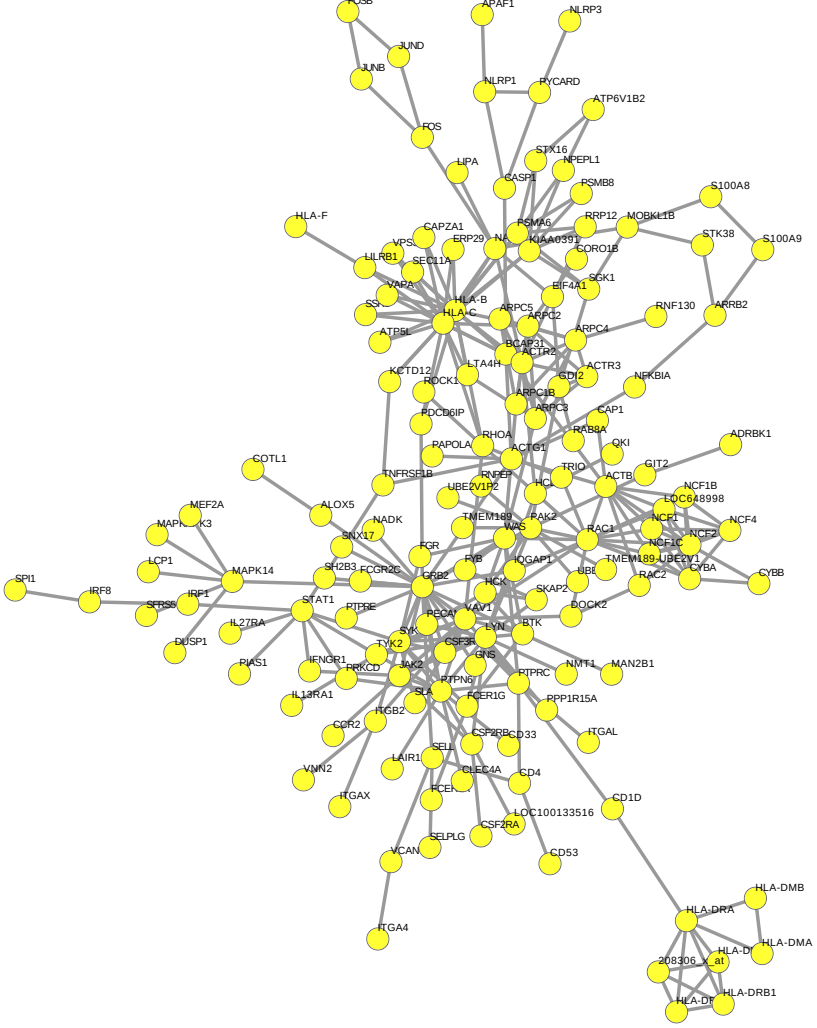
FOS
JUND
JUNB
APAF1
NLRP3
NLRP1
PYCARD
ATP6V1B2
STX16
NPEPL1
LIPA
CASP1
PSMB8
S100A8
HLA-F
CAPZA1
PSMA6
RRP12
MOBKL1B
STK38
S100A9
VPS
ERP29
NA
KIAA0391
CORO1B
LILRB1
SEC11A
SGK1
VAPA
EIF4A1
SS
HLA-B
HLA-C
ARPC5
ARPC2
RNF130
ARRB2
ATP5L
ARPC4
BCAP31
ACTR2
ACTR3
KCTD12
LTA4H
GDI2
NFKBIA
RDCK1
ARPC1B
ARPC3
PDCD6IP
CAP1
RAB8A
ADRBK1
RHOA
QKI
PAPOLA
ACTG1
COTL1
TRIO
GIT2
TNFRSF1B
RNF31
ACTB
HCL
NCF1B
UBE2V1P2
LOC648998
ALOX5
MEF2A
NADK
TMEM189
PAK2
NCF1
NCF4
MAPK
K3
SNX17
WAS
RAC1
NCF2
NCF1C
FGR
LCP1
RYB
IQGAP1
TMEM189-UBE2V1
SH2B3
FCGR2C
UBB
CYBA
CYBB
SPI1
MAPK14
GRB2
HCK
RAC2
IRF8
SKAP2
IRF1
SFRS9
STAT1
PTPRE
DOCK2
PECAM
VAV1
IL27RA
BTK
SYK
LYN
DUSP1
TYK2
CSF3R
GNS
PIAS1
IFNGR1
NMT1
MAN2B1
PRKCD
JAK2
PTPRC
PTPN6
IL13RA1
SLA
FCER1G
PPP1R15A
ITGB2
CCR2
ITGAL
CSF2RB
CD33
SELL
LAIR1
VNN2
CLEC4A
CD4
FCER1
ITGAX
CD1D
LOC100133516
CSF2RA
SELPLG
VCAN
CD53
HLA-DMB
HLA-DRA
HLA-DMA
HLA-D
208306_x_at
HLA-DRB1
HLA-DR
ITGA4

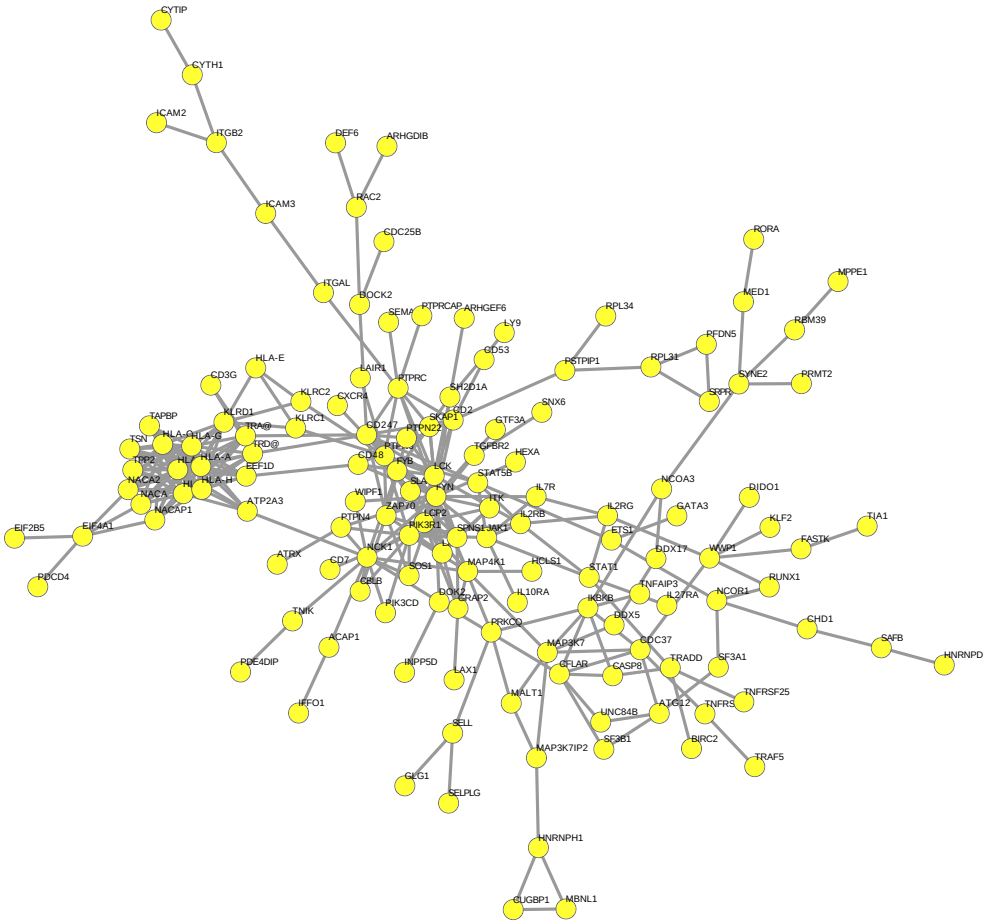
CYTIP
CYTH1
ICAM2
ITGB2
DEF6
ARHGDIB
RAC2
ICAM3
CDC25B
RORA
MPPE1
MED1
ITGAL
BOCK2
SEMA
PTPRCAP
ARHGEF6
RPL34
RBM39
LY9
PFDN5
CD53
HLA-E
PSTPIP1
RPL31
CD3G
LAIR1
PTPRC
SYNE2
PRMT2
KLRC2
CXCR4
SH2D1A
SPPR
SNX6
TAPBP
KLRD1
CD2
KLRC1
SKAP1
GTF3A
TRA@
CD247
PTPN22
TSN
HLA-DRA-C
TRD@
TGFBR2
HEXA
TPP2
HLA-A
CD48
EEF1D
LYB
LCK
STAT5B
NACA2
HLA-B
SIA
CYN
NCOA3
DIDO1
NACA
WIPF1
IL7R
ITK
ATP2A3
ZAP70
IL2RG
GATA3
NACAP1
LCP2
IL2RB
KLF2
TIA1
EIF2B5
EIF4A1
RTPN4
PIK3R1
SH3SH3D1
ETSL
FASTK
ATRX
NCK1
DDX17
WWP1
CD7
SOS1
MAP4K1
HCLS1
STAT1
RUNX1
PBCD4
CBLB
DOK1
IL10RA
TNFAIP3
NCOR1
IL27RA
IKBKB
PIK3CD
GRAP2
DDX5
CHD1
TNIK
PRKCD
SAFB
ACAP1
MAP3K7
CDC37
HNRNPD
PDE4DIP
INPP5D
LAX1
CFLAR
CASP8
TRADD
SF3A1
IFFO1
MALT1
TNFRSF25
ATG12
TNFRS
UNC84B
SELL
SF3B1
BIRC2
MAP3K7IP2
TRAF5
GLG1
SELPLG
HNRNPH1
CUGBP1
MBNL1

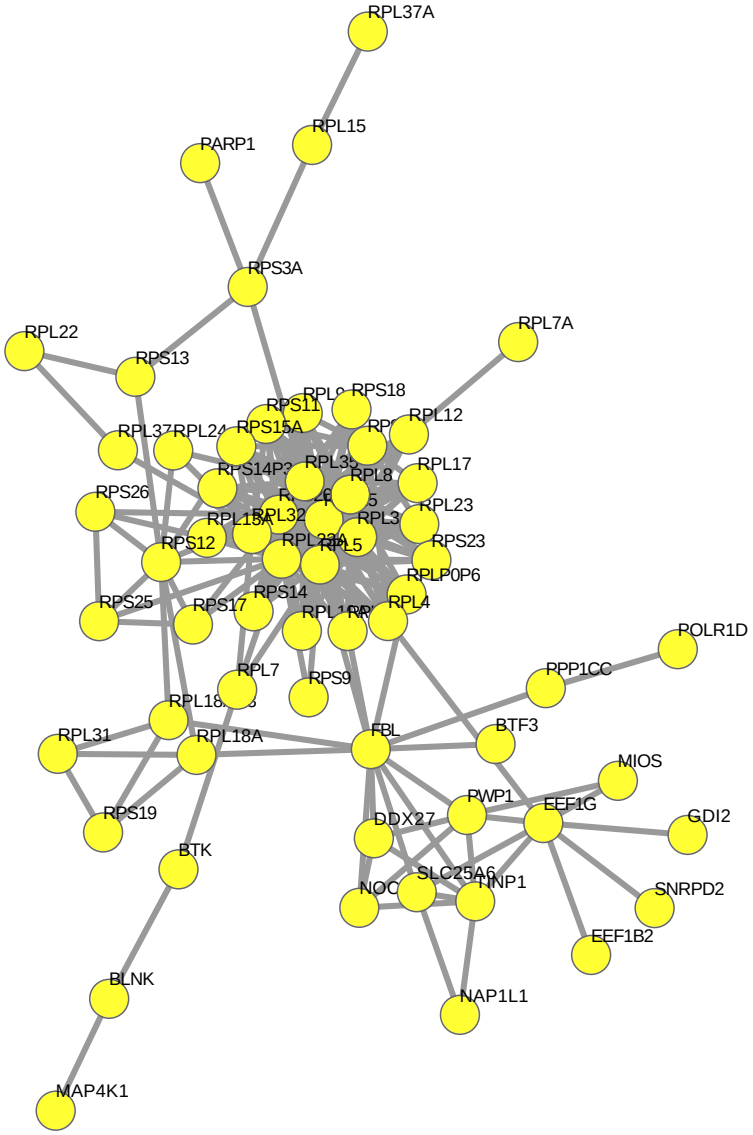
RPL37A
RPL15
PARP1
RPS3A
RPL22
RPS13
RPL7A
RPS18
RPS11
RPL12
RPS15A
RPL17
RPS26
RPL23
RPS23
RPS12
RPLP0P6
RPS25
RPS17
RPS14
RPL4
POLR1D
PPP1CC
RPL7
RPS9
RPL31
RPL18A
FBL
BTF3
MIOS
PWP1
EEF1G
GDI2
RPS19
DDX27
BTK
SLC25A6
NOC
HNP1
SNRPD2
EEF1B2
BLNK
NAP1L1
MAP4K1

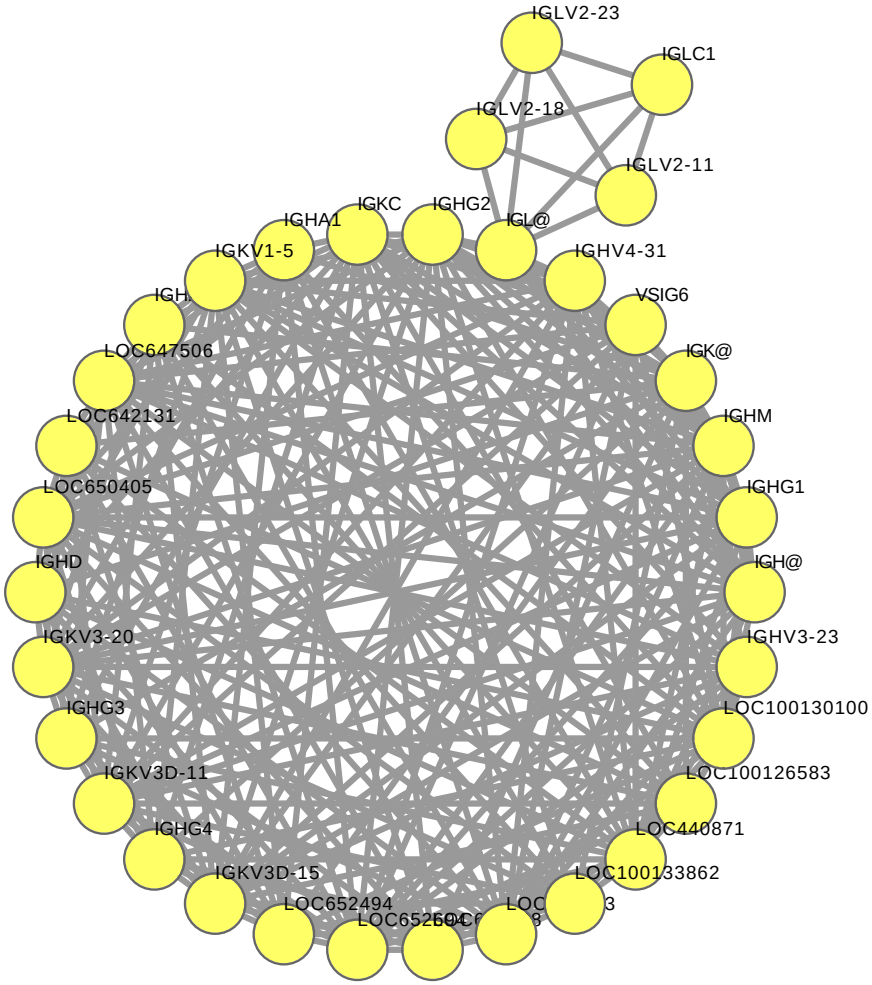
IGLV2-23
IGLC1
IGLV2-18
IGLV2-11
IGKC
IGHG2
IGHA1
IGL@
IGKV1-5
IGHV4-31
VSIG6
LOC647506
IGK@
LOC642131
IGHM
LOC650405
IGHG1
IGHD
IGH@
IGKV3-20
IGHV3-23
IGHG3
LOC100130100
IGKV3D-11
LOC100126583
IGHG4
LOC440871
IGKV3D-15
LOC100133862
LOC652494

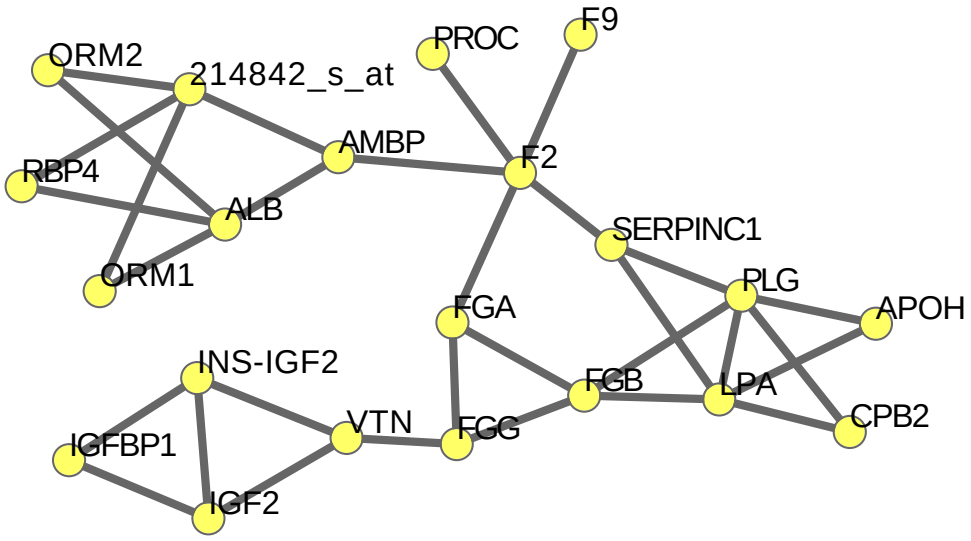
ORM2
214842_s_at
PROC
F9
AMBP
F2
RBP4
ALB
SERPINC1
ORM1
PLG
APOH
FGA
INS-IGF2
FGB
LPA
VTN
FGG
CPB2
IGFBP1
IGF2

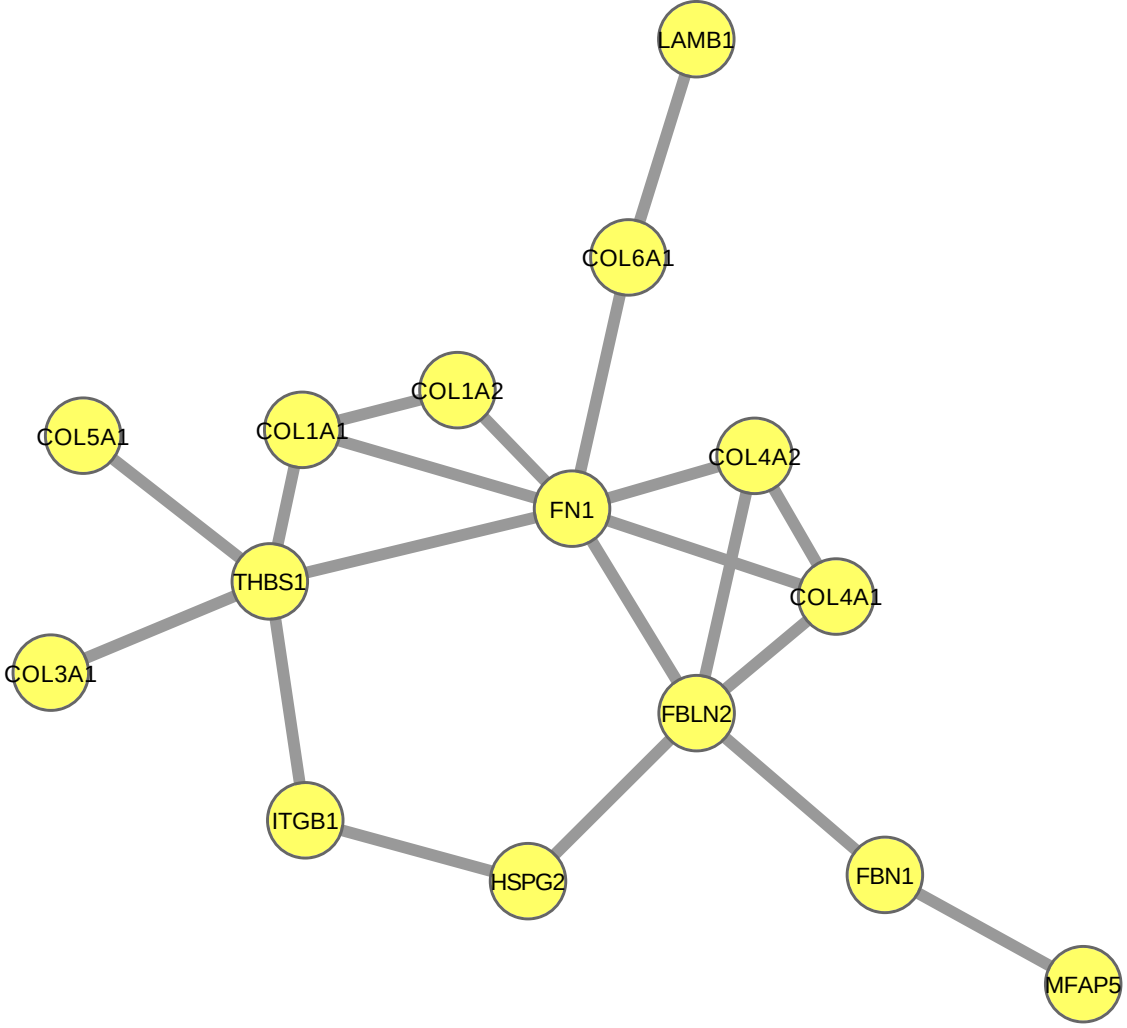
LAMB1
COL6A1
COL1A2
COL5A1
COL1A1
COL4A2
FN1
THBS1
COL4A1
COL3A1
FBLN2
ITGB1
HSPG2
FBN1
MFAP5

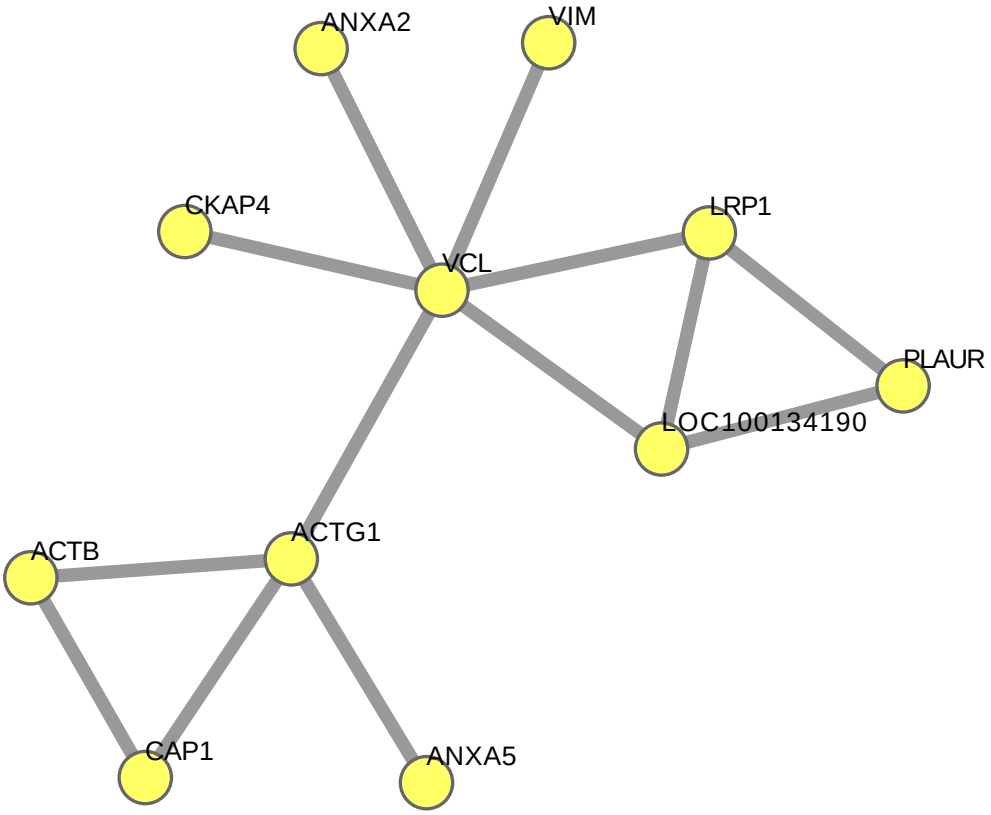
ANXA2
VIM
CKAP4
LRP1
VCL
PLAUR
LOC100134190
ACTG1
ACTB
CAP1
ANXA5

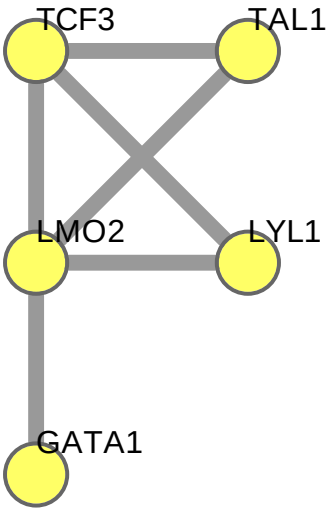
TCF3
TAL1
LMO2
LYL1
GATA1

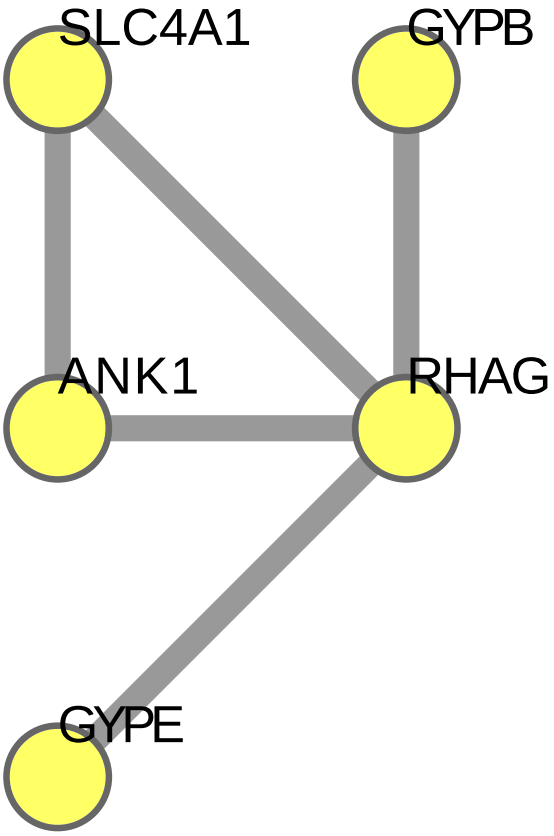
SLC4A1
GYPB
ANK1
RHAG
GYPE

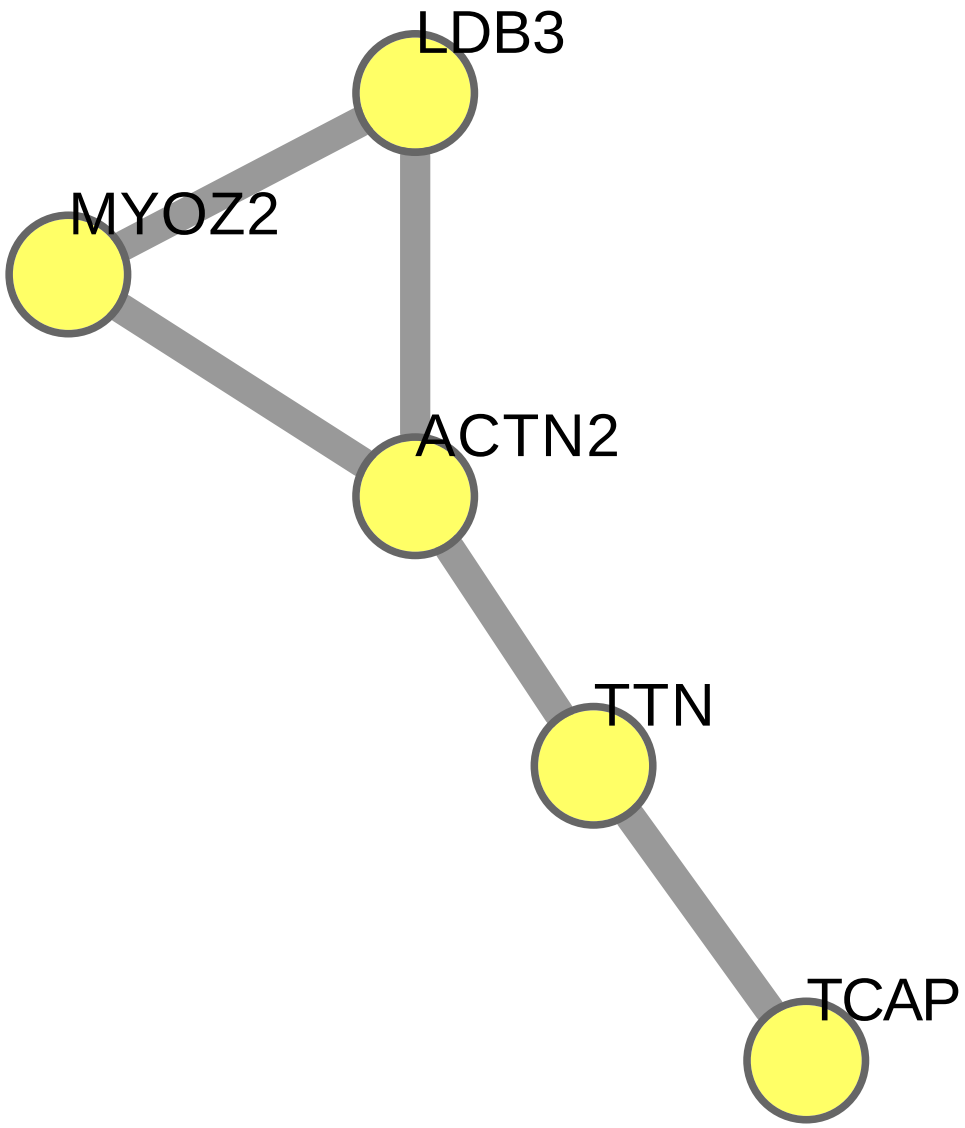
LDB3
MYOZ2
ACTN2
TTN
TCAP

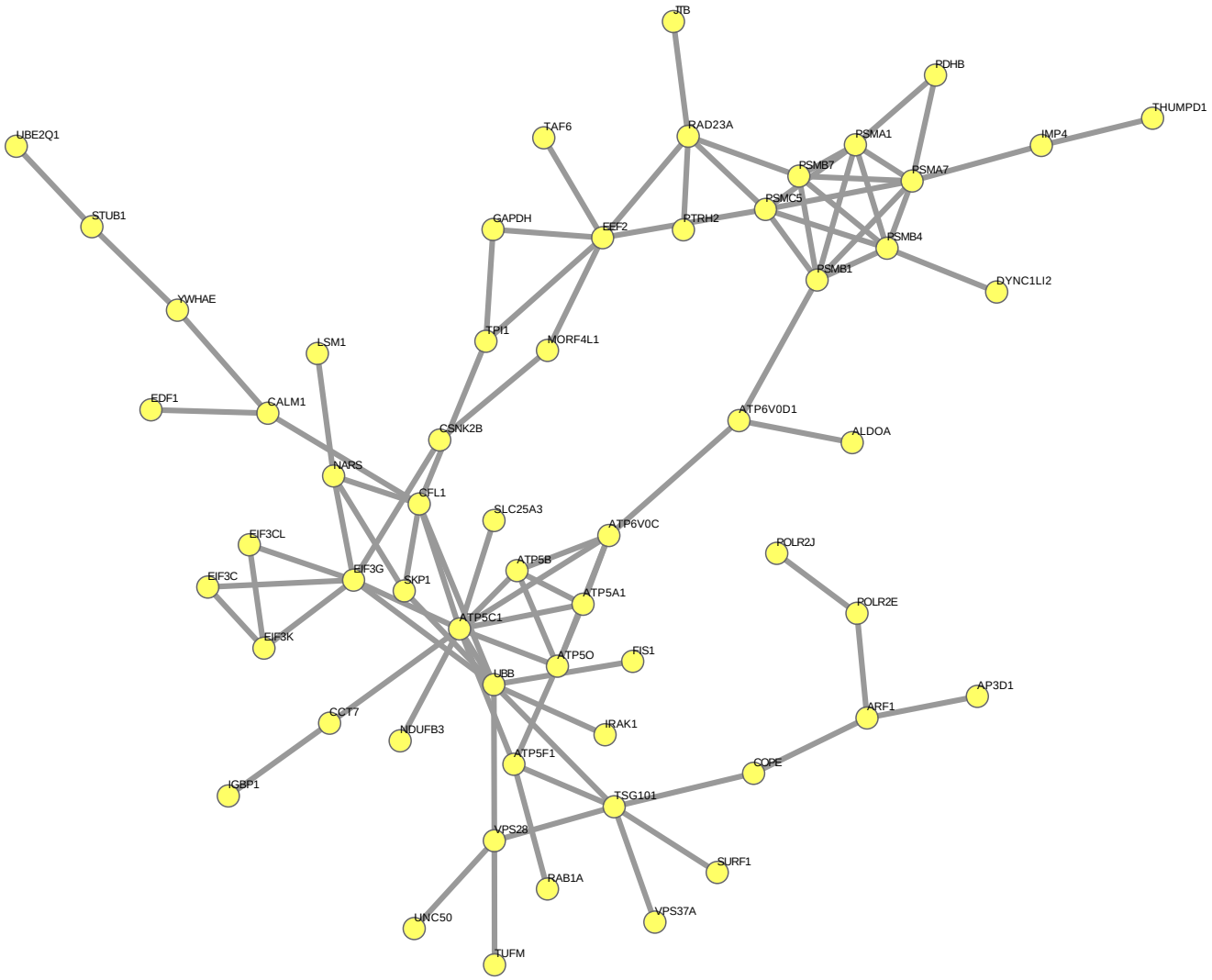
JTB
PDHB
THUMPD1
UBE2Q1
TAF6
RAD23A
PSMA1
IMP4
PSMB7
PSMA7
PSMC5
STUB1
GAPDH
EEF2
PTRH2
PSMB4
PSMB1
DYNC1LI2
YWHAE
TPI1
NORF4L1
LSM1
EDF1
CALM1
ATP6V0D1
ALDOA
CSNK2B
NARS
CFL1
SLC25A3
ATP6V0C
EIF3CL
POLR2J
ATP5B
EIF3C
EIF3G
SKP1
ATP5A1
POLR2E
ATP5C1
EIF3K
ATP5O
FIS1
UBB
AP3D1
ARF1
CCT7
NDUFB3
IRAK1
ATP5F1
COPE
IGBP1
TSG101
VPS28
SURF1
RAB1A
VPS37A
UNC50
TUFM

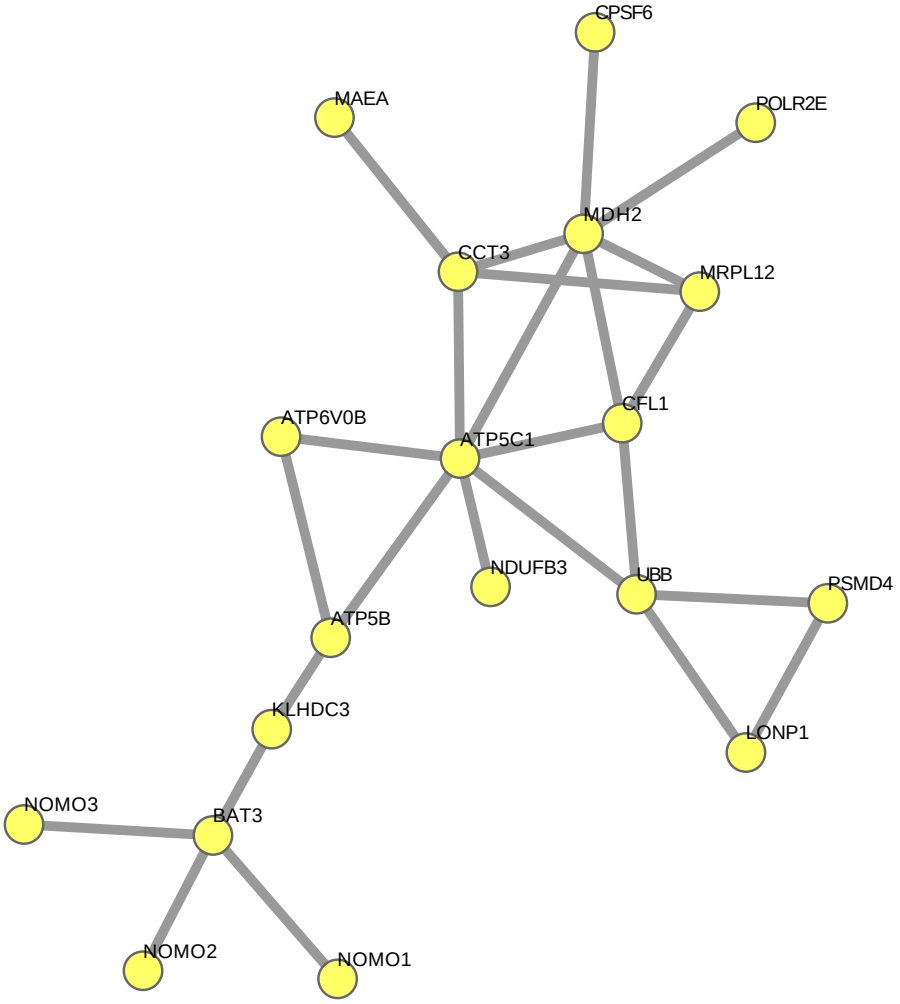
CPSF6
MAEA
POLR2E
MDH2
CCT3
MRPL12
CFL1
ATP6V0B
ATP5C1
NDUFB3
UBB
PSMD4
ATP5B
KLHDC3
LONP1
NOMO3
BAT3
NOMO2
NOMO1

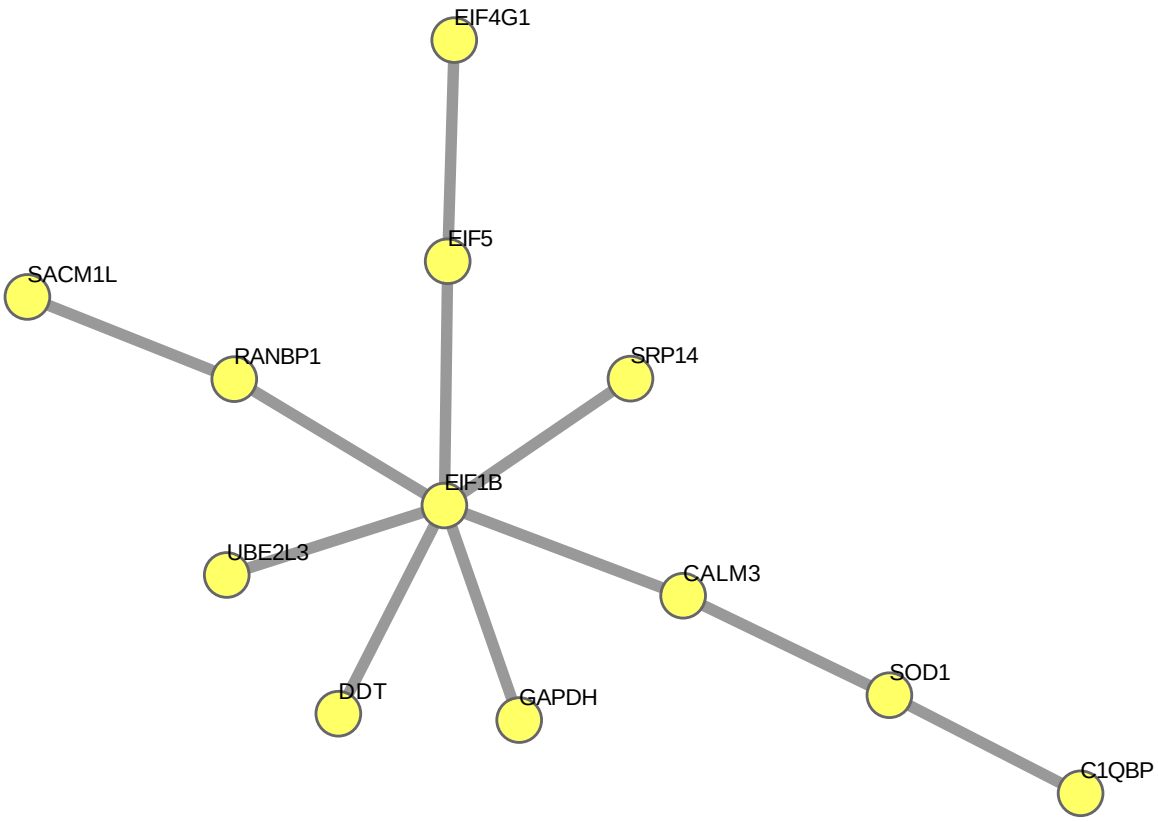
EIF4G1
EIF5
SACM1L
RANBP1
SRP14
EIF1B
UBE2L3
CALM3
SOD1
DDT
GAPDH
C1QBP

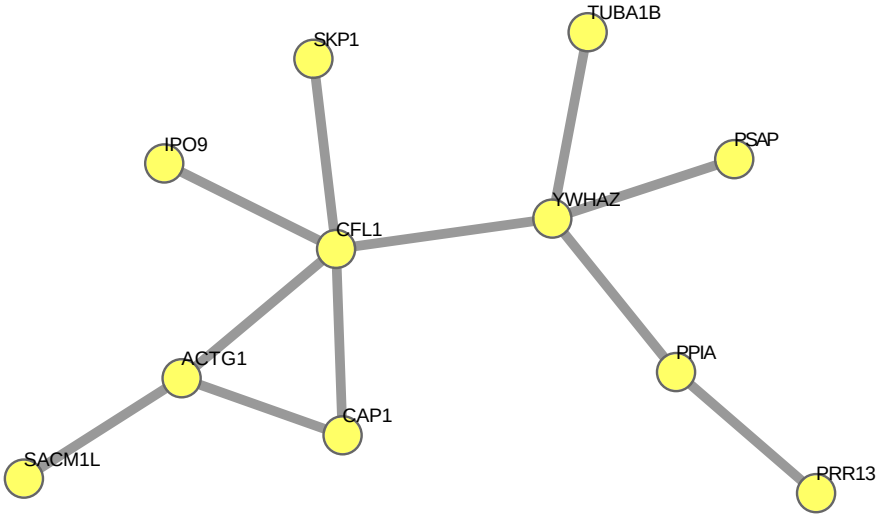
TUBA1B
SKP1
IPO9
PSAP
YWHAZ
CFL1
ACTG1
PPIA
CAP1
SACM1L
PRR13